HomeLab Embedded Systems

μC 8051
ISS / VHDL

Teacher:
Doc. Luigi Pomante

Lecturer:
Fausto D'Antonio
fausto.dantonio@gmail.com

Contents

- μC 8051
- Workflow
- Program to be simulated
- *Practical demonstration*
- Conclusions

μC 8051 Architecture

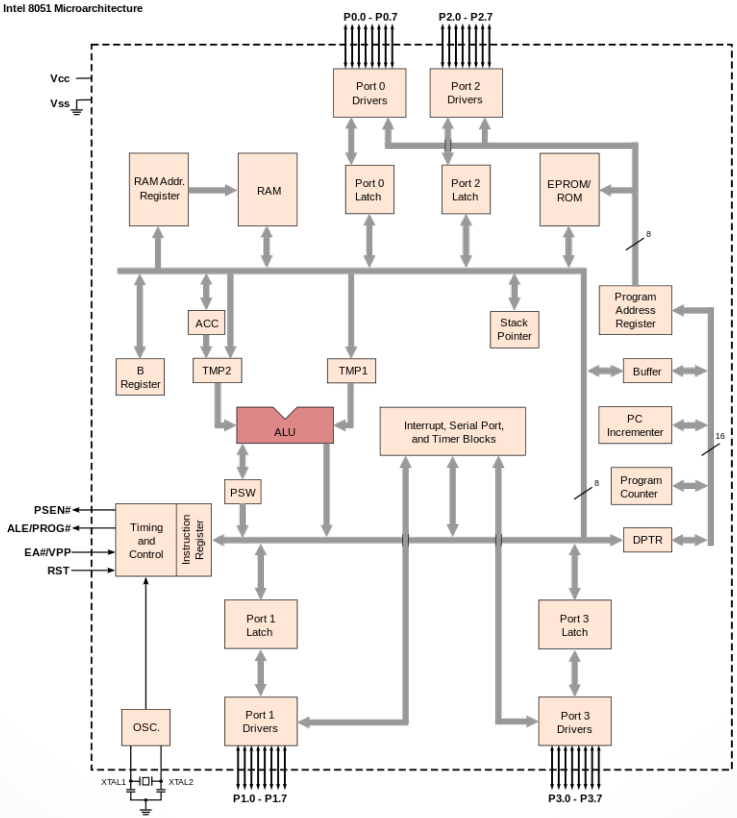

μC 8051 ISA

- Arithmetic Instructions
  - ADD A,Rn ; INC A ; …
- Control Instructions
  - ACALL addr11 ; LJMP addr16 ; …
- Logic Instructions
  - ANL A,Rn ; XRL A,Rn ; …
- Single Bit Instructions
  - CLR C ; SETB bit ; …
- Data Transfer Instructions
  - MOV A,Rn ; …

Workflow

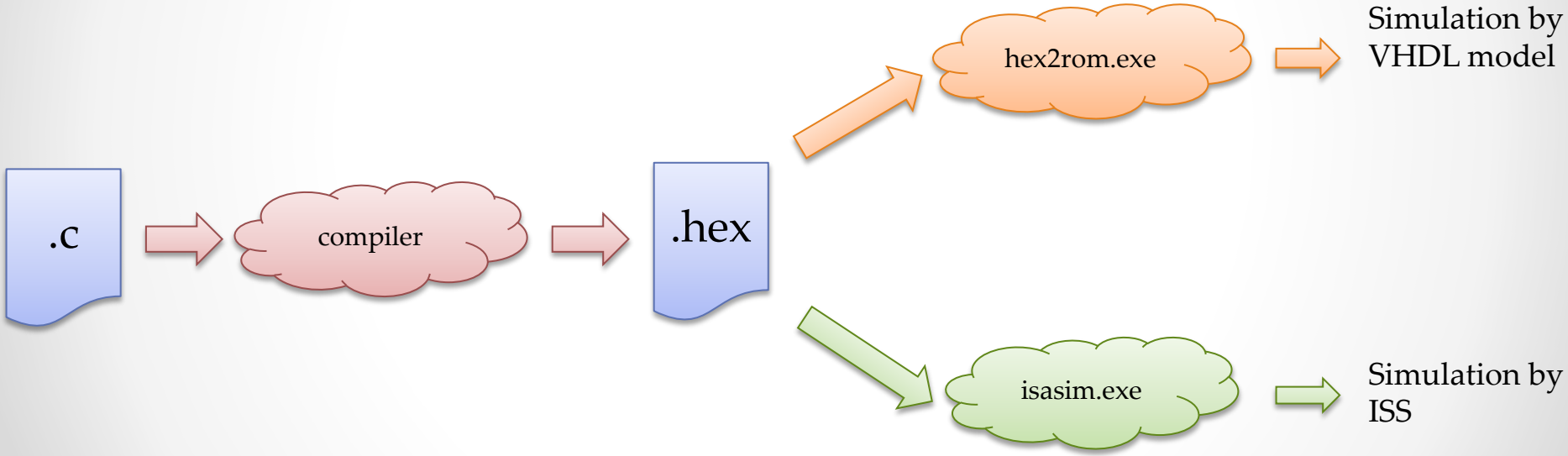
.c
compiler
.hex
hex2rom.exe
Simulation by VHDL model
isasim.exe
Simulation by ISS

From .c to .hex executable

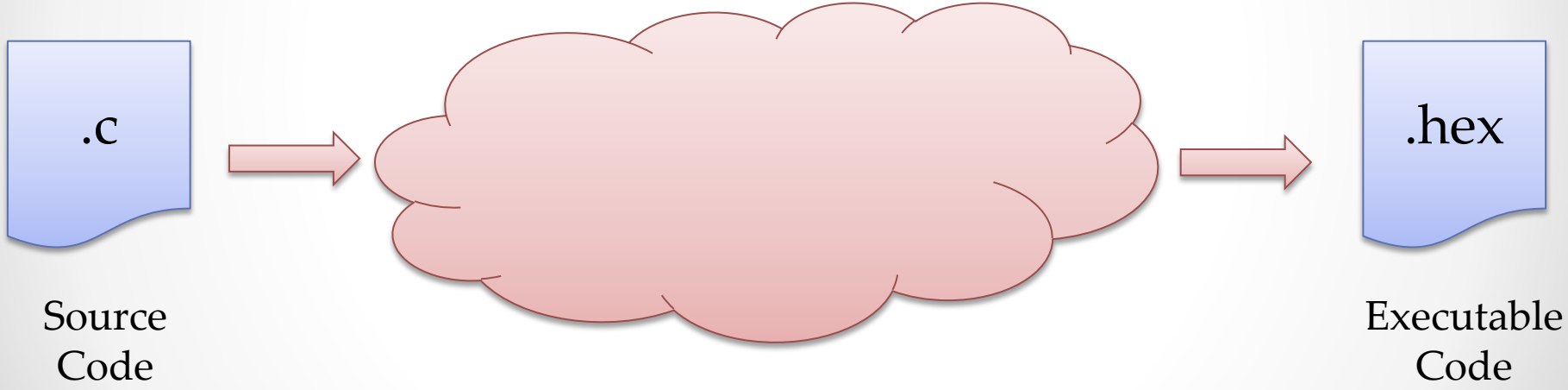

From .c to .hex executable

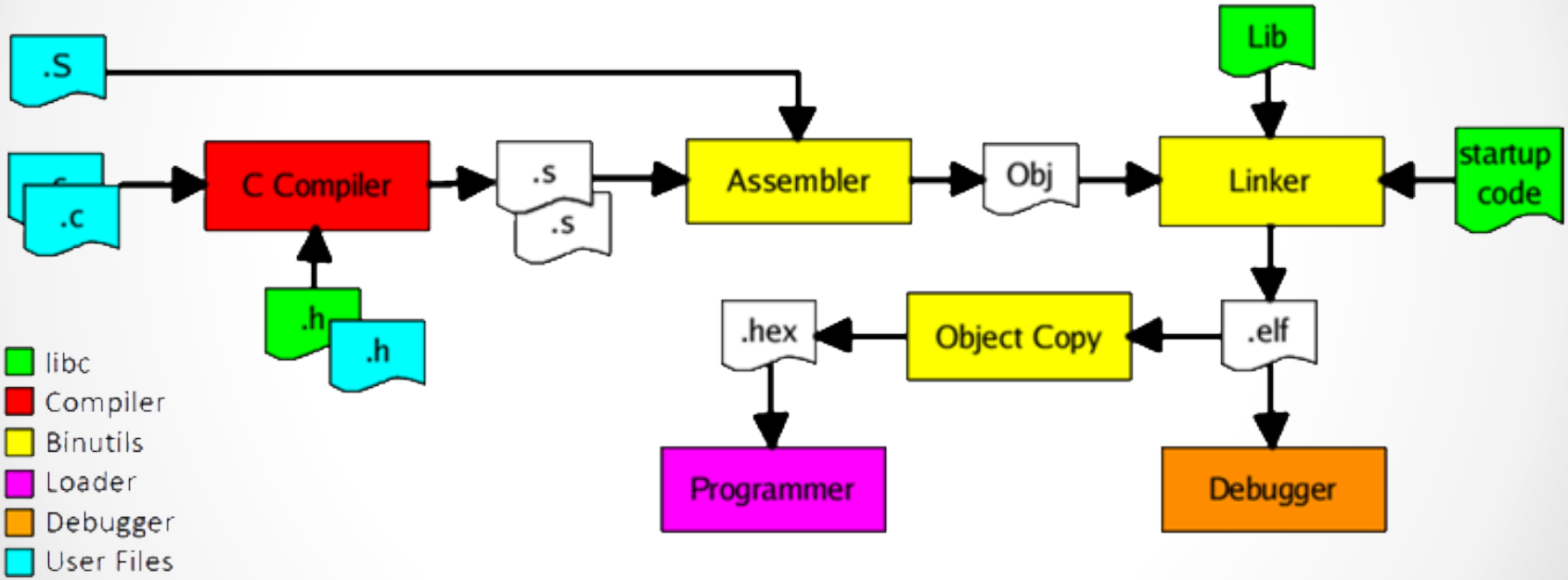

μC 8051 Compilers

- SDCC (http://sdcc.sourceforge.net/)
  - open source
  - Supports many microcontroller families
  - May be used within most notable IDEs
- KEIL (http://www.keil.com/C51/)
  - Proprietary software
  - Highly optimized
  - Supports an high number of devices
- MikroC (http://www.mikroe.com/mikroc/8051/)
  - Proprietary software

Code Simulation

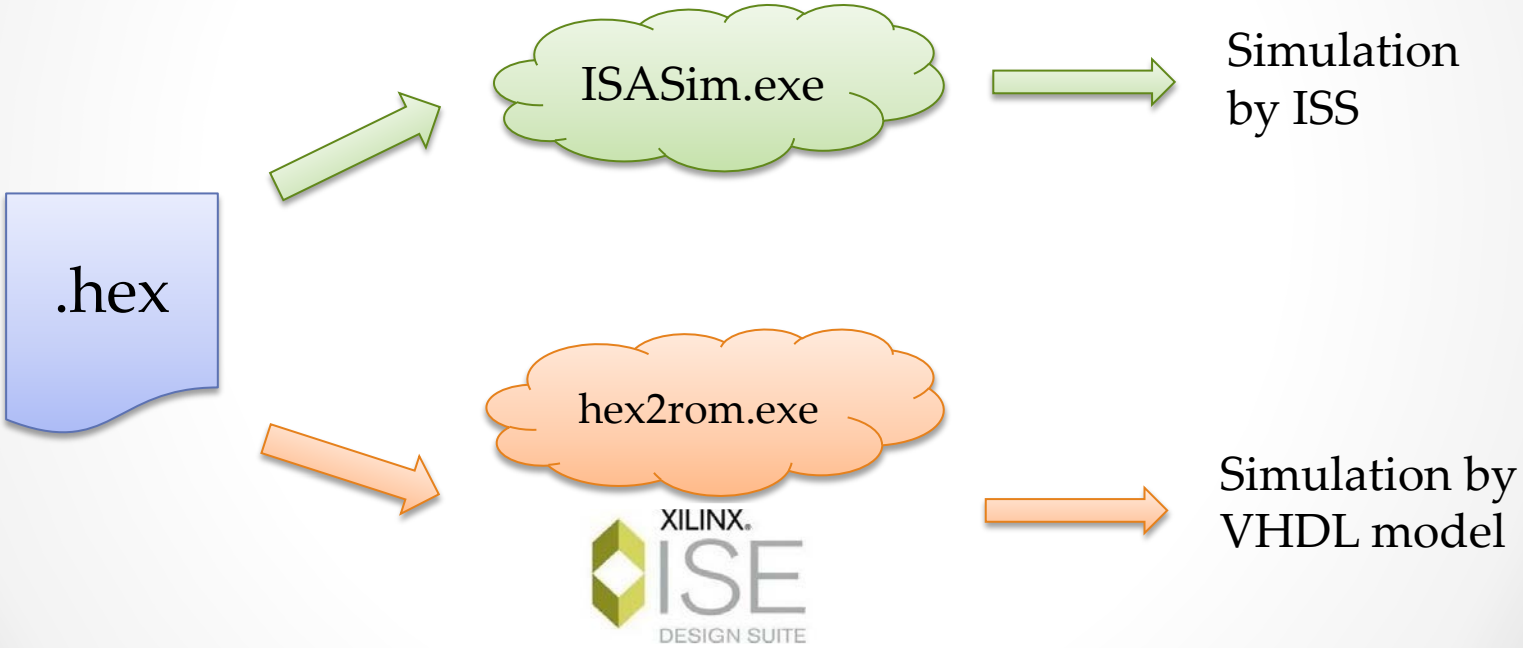

Program to simulate

- Goal:
  - Develop MAC operation
- Input Data:
  - 5 words pair $(a_i, b_i)\ \forall i \in \{1, \dots, 5\}$
- Output Data:
  - Sum of products between each pair elements:

$$\sum_{i=1}^{5} a_i \times b_i$$

Program to simulate

- Data Structure & Constructs
  - Array
  - For loop
- mac.c file
- External libraries
  - reg51.h for KEIL compiler
  - 8051.h for SDCC compiler

Conclusions

- SDCC Compiler
  - Open source
  - No IDE provided, but integrable!
  - Compiles for μC families.
  - Highly configurable
- KEIL Compiler
  - proprietary software
  - Provided with IDE
  - Compiles for specific devices

Conclusions

- ISS Simulation
  - Software simulation provides
    - Projected information on 8051 microprocessor
    - Information of execution on the real machine
- VHDL Simulation
  - Single signal simulation
    - It allows to analyze temporal evolution for each of them.
  - Requires a big amount of computational power.

Thanks for your attention!

Questions are welcome!