Embedded Systems Design: A Unified Hardware/Software Introduction

Digital Camera Example

Cap7

Outline

- Introduction to a simple digital camera
- Designer's perspective
- Requirements specification
- Design
  - Four implementations

Introduction

- Putting it all together
  - General-purpose processor
  - Single-purpose processor
    - Custom
    - Standard
  - Memory
  - Interfacing
- Knowledge applied to designing a simple digital camera
  - General-purpose vs. single-purpose processors
  - Partitioning of functionality among different processor types

Introduction to a simple digital camera

- Captures images
- Stores images in digital format
  - No film
  - Multiple images stored in camera
    - Number depends on amount of memory and bits used per image
- Downloads images to PC
- Only recently possible
  - Systems-on-a-chip
    - Multiple processors and memories on one IC
  - High-capacity flash memory
- Very simple description used for example
  - Many more features with real digital camera
    - Variable size images, image deletion, digital stretching, zooming in and out, etc.

Designer's perspective

- Two key tasks
  - Processing images and storing in memory
    - When shutter pressed:
      - Image captured
      - Converted to digital form by charge-coupled device (CCD)
      - Compressed and archived in internal memory
  - Uploading images to PC
    - Digital camera attached to PC
    - Special software commands camera to transmit archived images serially

Charge-coupled device (CCD)

- Special sensor that captures an image
- Light-sensitive silicon solid-state device composed of many cells

When exposed to light, each cell becomes electrically charged. This charge can then be converted to a 8-bit value where 0 represents no exposure while 255 represents very intense exposure of that cell to light.

Some of the columns are covered with a black strip of paint. The light-intensity of these pixels is used for zero-bias adjustments of all the cells.

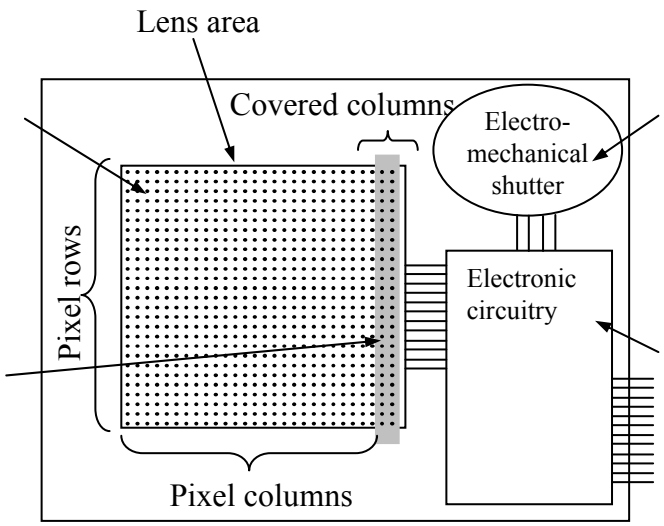

The electromechanical shutter is activated to expose the cells to light for a brief moment.

The electronic circuitry, when commanded, discharges the cells, activates the electromechanical shutter, and then reads the 8-bit charge value of each cell. These values can be clocked out of the CCD by external logic through a standard parallel bus interface.

Zero-bias error

- Manufacturing errors cause cells to measure slightly above or below actual light intensity
- Error typically same across columns, but different across rows
- Some of left most columns blocked by black paint to detect zero-bias error
  - Reading of other than 0 in blocked cells is zero-bias error
  - Each row is corrected by subtracting the average error found in blocked cells for that row

								Covered cells		Zero-bias adjustment
136	170	155	140	144	115	112	248	**12**	**14**	**-13**
145	146	168	123	120	117	119	147	**12**	**10**	**-11**
144	153	168	117	121	127	118	135	**9**	**9**	**-9**
176	183	161	111	186	130	132	133	**0**	**0**	**0**
144	156	161	133	192	153	138	139	**7**	**7**	**-7**
122	131	128	147	206	151	131	127	**2**	**0**	**-1**
121	155	164	185	254	165	138	129	**4**	**4**	**-4**
173	175	176	183	188	184	117	129	**5**	**5**	**-5**

Before zero-bias adjustment

123	157	142	127	131	102	99	235
134	135	157	112	109	106	108	136
135	144	159	108	112	118	109	126
176	183	161	111	186	130	132	133
137	149	154	126	185	146	131	132
121	130	127	146	205	150	130	126
117	151	160	181	250	161	134	125
168	170	171	178	183	179	112	124

After zero-bias adjustment

Compression

- Store more images
- Transmit image to PC in less time
- JPEG (Joint Photographic Experts Group)
  - Popular standard format for representing digital images in a compressed form
  - Provides for a number of different modes of operation
  - Mode used in this chapter provides high compression ratios using DCT (discrete cosine transform)
  - Image data divided into blocks of 8 x 8 pixels
  - 3 steps performed on each block
    - DCT
    - Quantization
    - Huffman encoding

DCT step

- Transforms original 8 x 8 block into a cosine-frequency domain
  - Upper-left corner values represent more of the essence of the image
  - Lower-right corner values represent finer details
    - Can reduce precision of these values and retain reasonable image quality
- FDCT (Forward DCT) formula
  - C(h) = if (h == 0) then 1/sqrt(2) else 1.0
    - Auxiliary function used in main function F(u,v)
  - $F(u,v) = \frac{1}{4} \times C(u) \times C(v) \Sigma_{x=0..7} \Sigma_{y=0..7} D_{xy} \times \cos(\pi(2u + 1)u/16) \times \cos(\pi(2y + 1)v/16)$
    - Gives encoded pixel at row u, column v
    - D_{xy} is original pixel value at row x, column y
- IDCT (Inverse DCT)
  - Reverses process to obtain original block (not needed for this design)

Quantization step

- Achieve high compression ratio by reducing image quality
  - Reduce bit precision of encoded data
    - Fewer bits needed for encoding
    - One way is to divide all values by a factor of 2
      - Simple right shifts can do this
  - Dequantization would reverse process for decompression

1150	39	-43	-10	26	-83	11	41
-81	-3	115	-73	-6	-2	22	-5
14	-11	1	-42	26	-3	17	-38
2	-61	-13	-12	36	-23	-18	5
44	13	37	-4	10	-21	7	-8
36	-11	-9	-4	20	-28	-21	14
-19	-7	21	-6	3	3	12	-21
-5	-13	-11	-17	-4	-1	7	-4

After being decoded using DCT

Divide each cell's value by 8

144	5	-5	-1	3	-10	1	5
-10	0	14	-9	-1	0	3	-1
2	-1	0	-5	3	0	2	-5
0	-8	-2	-2	5	-3	-2	1
6	2	5	-1	1	-3	1	-1
5	-1	-1	-1	3	-4	-3	2
-2	-1	3	-1	0	0	2	-3
-1	-2	-1	-2	-1	0	1	-1

After quantization

Huffman encoding step

- Serialize 8 x 8 block of pixels
  - Values are converted into single list using zigzag pattern

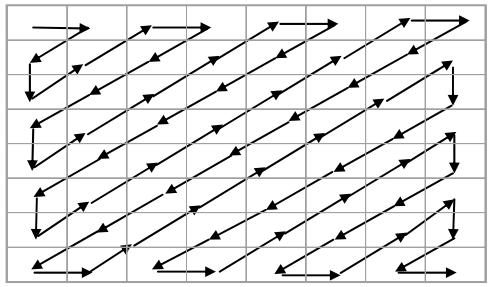

- Perform Huffman encoding
  - More frequently occurring pixels assigned short binary code
  - Longer binary codes left for less frequently occurring pixels
- Each pixel in serial list converted to Huffman encoded values
  - Much shorter list, thus compression

Huffman encoding example

- Pixel frequencies on left
  - Pixel value –1 occurs 15 times
  - Pixel value 14 occurs 1 time
- Build Huffman tree from bottom up
  - Create one leaf node for each pixel value and assign frequency as node's value
  - Create an internal node by joining any two nodes whose sum is a minimal value
    - This sum is internal nodes value
  - Repeat until complete binary tree
- Traverse tree from root to leaf to obtain binary code for leaf's pixel value
  - Append 0 for left traversal, 1 for right traversal
- Huffman encoding is reversible
  - No code is a prefix of another code

Pixel frequencies

-1	15x
0	8x
-2	6x
1	5x
2	5x
3	5x
5	5x
-3	4x
-5	3x
-10	2x
144	1x
-9	1x
-8	1x
-4	1x
6	1x
14	1x

Huffman tree

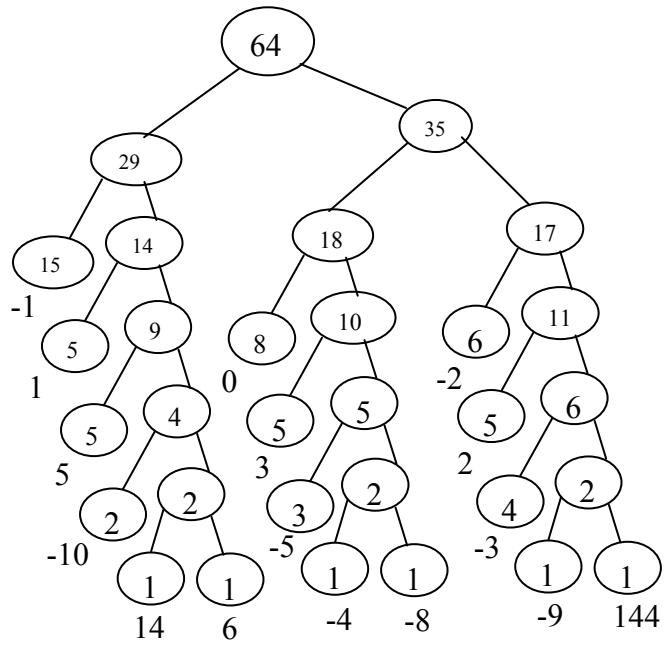

Huffman codes

-1	00
0	100
-2	110
1	010
2	1110
3	1010
5	0110
-3	11110
-5	10110
-10	01110
144	111111
-9	111110
-8	101111
-4	101110
6	011111
14	011110

Archive step

- Record starting address and image size
  - Can use linked list
- One possible way to archive images
  - If max number of images archived is N:
    - Set aside memory for N addresses and N image-size variables
    - Keep a counter for location of next available address
    - Initialize addresses and image-size variables to 0
    - Set global memory address to N x 4
      - Assuming addresses, image-size variables occupy N x 4 bytes
    - First image archived starting at address N x 4
    - Global memory address updated to N x 4 + (compressed image size)
- Memory requirement based on N, image size, and average compression ratio

Uploading to PC

- When connected to PC and upload command received
  - Read images from memory
  - Transmit serially using UART
  - While transmitting
    - Reset pointers, image-size variables and global memory pointer accordingly

Requirements Specification

- System's requirements – what system should do
  - Nonfunctional requirements
    - Constraints on design metrics (e.g., "should use 0.001 watt or less")
  - Functional requirements
    - System's behavior (e.g., "output X should be input Y times 2")
  - Initial specification may be very general and come from marketing dept.
    - E.g., short document detailing market need for a low-end digital camera that:
      - captures and stores at least 50 low-res images and uploads to PC,
      - costs around $100 with single medium-size IC costing less that $25,
      - has long as possible battery life,
      - has expected sales volume of 200,000 if market entry < 6 months,
      - 100,000 if between 6 and 12 months,
      - insignificant sales beyond 12 months

Nonfunctional requirements

- Design metrics of importance based on initial specification
  - **Performance**: time required to process image
  - **Size**: number of elementary logic gates (2-input NAND gate) in IC
  - **Power**: measure of avg. electrical energy consumed while processing
  - **Energy**: battery lifetime (power x time)
- Constrained metrics
  - Values **must** be below (sometimes above) certain threshold
- Optimization metrics
  - Improved as much as possible to improve product
- Metric can be both constrained and optimization

Nonfunctional requirements (cont.)

- Performance
  - Must process image fast enough to be useful
  - 1 sec reasonable constraint
    - Slower would be annoying
    - Faster not necessary for low-end of market
  - Therefore, constrained metric
- Size
  - Must use IC that fits in reasonably sized camera
  - Constrained and optimization metric
    - Constraint may be 200,000 gates, but smaller would be cheaper
- Power
  - Must operate below certain temperature (cooling fan not possible)
  - Therefore, constrained metric
- Energy
  - Reducing power or time reduces energy
  - Optimized metric: want battery to last as long as possible

Informal functional specification

- Flowchart breaks functionality down into simpler functions
- Each function's details could then be described in English
  - Done earlier in chapter
- Low quality image has resolution of 64 x 64
- Mapping functions to a particular processor type not done at this stage

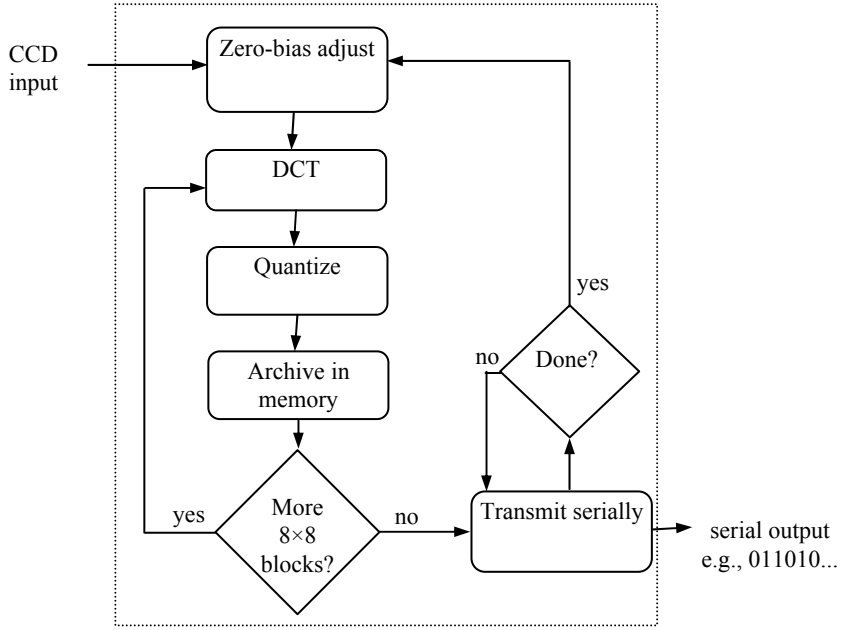

Refined functional specification

- Refine informal specification into one that can actually be executed
- Can use C/C++ code to describe each function
  - Called system-level model, prototype, or simply model
  - Also is first implementation
- Can provide insight into operations of system
  - Profiling can find computationally intensive functions
- Can obtain sample output used to verify correctness of final implementation

Executable model of digital camera

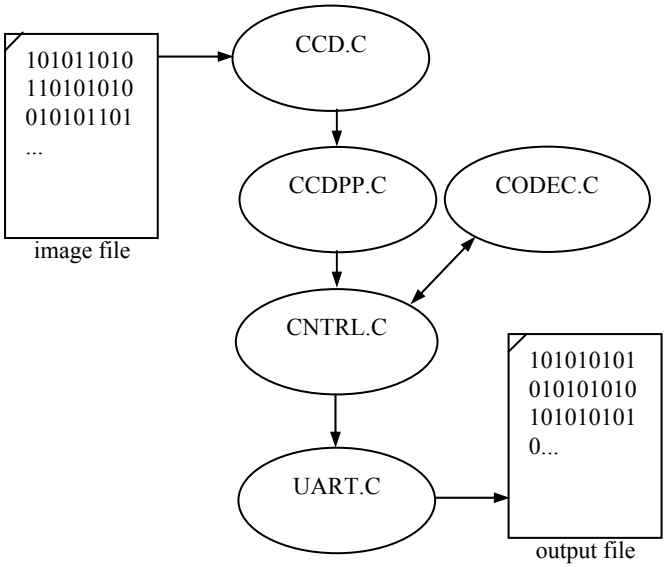

CCD module

- Simulates real CCD
- *CcdInitialize* is passed name of image file
- *CcdCapture* reads “image” from file
- *CcdPopPixel* outputs pixels one at a time

```
#include <stdio.h>
#define SZ_ROW       64
#define SZ_COL      (64 + 2)
static FILE *imageFileHandle;
static char buffer[SZ_ROW][SZ_COL];
static unsigned rowIndex, colIndex;
```

```
char CcdPopPixel(void) {
    char pixel;
    pixel = buffer[rowIndex][colIndex];
    if( ++colIndex == SZ_COL ) {
        colIndex = 0;
        if( ++rowIndex == SZ_ROW ) {
            colIndex = -1;
            rowIndex = -1;
        }
    }
    return pixel;
}
```

```
void CcdInitialize(const char *imageFileName) {
    imageFileHandle = fopen(imageFileName, "r");
    rowIndex = -1;
    colIndex = -1;
}
```

```
void CcdCapture(void) {
    int pixel;
    rewind(imageFileHandle);
    for(rowIndex=0; rowIndex<SZ_ROW; rowIndex++) {
        for(colIndex=0; colIndex<SZ_COL; colIndex++) {
            if( fscanf(imageFileHandle, "%i", &pixel) == 1 ) {
                buffer[rowIndex][colIndex] = (char)pixel;
            }
        }
    }
    rowIndex = 0;
    colIndex = 0;
}
```

CCDPP (CCD PreProcessing) module

- Performs zero-bias adjustment
- *CcdppCapture* uses *CcdCapture* and *CcdPopPixel* to obtain image
- Performs zero-bias adjustment after each row read in

```
void CcdppCapture(void) {
    char bias;
    CcdCapture();
    for(rowIndex=0; rowIndex<SZ_ROW; rowIndex++) {
        for(colIndex=0; colIndex<SZ_COL; colIndex++) {
            buffer[rowIndex][colIndex] = CcdPopPixel();
        }
        bias = (CcdPopPixel() + CcdPopPixel()) / 2;
        for(colIndex=0; colIndex<SZ_COL; colIndex++) {
            buffer[rowIndex][colIndex] -= bias;
        }
    }
    rowIndex = 0;
    colIndex = 0;
}
```

```
#define SZ_ROW      64
#define SZ_COL      64
static char buffer[SZ_ROW][SZ_COL];
static unsigned rowIndex, colIndex;
```

```
void CcdppInitialize() {
    rowIndex = -1;
    colIndex = -1;
}
```

```
char CcdppPopPixel(void) {
    char pixel;
    pixel = buffer[rowIndex][colIndex];
    if( ++colIndex == SZ_COL ) {
        colIndex = 0;
        if( ++rowIndex == SZ_ROW ) {
            colIndex = -1;
            rowIndex = -1;
        }
    }
    return pixel;
}
```

UART module

- Actually a half UART
  - Only transmits, does not receive
- *UartInitialize* is passed name of file to output to
- *UartSend* transmits (writes to output file) bytes at a time

```
#include <stdio.h>
static FILE *outputFileHandle;
void UartInitialize(const char *outputFileName) {
    outputFileHandle = fopen(outputFileName, "w");
}
void UartSend(char d) {
    fprintf(outputFileHandle, "%i\n", (int)d);
}
```

CODEC module

- Models FDCT encoding
- *ibuffer* holds original 8 x 8 block
- *obuffer* holds encoded 8 x 8 block
- *CodecPushPixel* called 64 times to fill *ibuffer* with original block
- *CodecDoFdct* called once to transform 8 x 8 block
  - Explained in next slide
- *CodecPopPixel* called 64 times to retrieve encoded block from *obuffer*

```
static short ibuffer[8][8], obuffer[8][8], idx;


void CodecInitialize(void) { idx = 0; }
```

```
void CodecPushPixel(short p) {
    if( idx == 64 ) idx = 0;
    ibuffer[idx / 8][idx % 8] = p; idx++;
}
```

```
void CodecDoFdct(void) {
    int x, y;
    for(x=0; x<8; x++) {
        for(y=0; y<8; y++)
              obuffer[x][y] = FDCT(x, y, ibuffer);
    }
    idx = 0;
}
```

```
short CodecPopPixel(void) {
    short p;
    if( idx == 64 ) idx = 0;
    p = obuffer[idx / 8][idx % 8]; idx++;
    return p;
}
```

CODEC (cont.)

- Implementing FDCT formula

  $C(h) = \text{if } (h == 0) \text{ then } 1/\text{sqrt}(2) \text{ else } 1.0$

  $F(u,v) = \frac{1}{4} \times C(u) \times C(v) \sum_{x=0..7} \sum_{y=0..7} D_{xy} \times \cos(\pi(2u + 1)u/16) \times \cos(\pi(2y + 1)v/16)$
- Only 64 possible inputs to *COS*, so table can be used to save performance time
  - Floating-point values multiplied by 32,678 and rounded to nearest integer
  - 32,678 chosen in order to store each value in 2 bytes of memory
  - Fixed-point representation explained more later
- *FDCT* unrolls inner loop of summation, implements outer summation as two consecutive for loops

```
static short ONE_OVER_SQRT_TWO = 23170;
static double COS(int xy, int uv) {
     return COS_TABLE[xy][uv] / 32768.0;
}
static double C(int h) {
     return h ? 1.0 : ONE_OVER_SQRT_TWO / 32768.0;
}
```

```
static const short COS_TABLE[8][8] = {
    { 32768,  32138,  30273,  27245,  23170,  18204,  12539,   6392 },
    { 32768,  27245,  12539,  -6392, -23170, -32138, -30273, -18204 },
    { 32768,  18204, -12539, -32138, -23170,   6392,  30273,  27245 },
    { 32768,   6392, -30273, -18204,  23170,  27245, -12539, -32138 },
    { 32768,  -6392, -30273,  18204,  23170, -27245, -12539,  32138 },
    { 32768, -18204, -12539,  32138, -23170,  -6392,  30273, -27245 },
    { 32768, -27245,  12539,   6392, -23170,  32138, -30273,  18204 },
    { 32768, -32138,  30273, -27245,  23170, -18204,  12539,  -6392 }
};
```

```
static int FDCT(int u, int v, short img[8][8]) {
    double s[8], r = 0; int x;
    for(x=0; x<8; x++) {
     s[x] = img[x][0] * COS(0, v) + img[x][1] * COS(1, v) +
            img[x][2] * COS(2, v) + img[x][3] * COS(3, v) +
            img[x][4] * COS(4, v) + img[x][5] * COS(5, v) +
            img[x][6] * COS(6, v) + img[x][7] * COS(7, v);
    }
    for(x=0; x<8; x++) r += s[x] * COS(x, u);
    return (short)(r * .25 * C(u) * C(v));
}
```

CNTRL (controller) module

- Heart of the system
- *CntrlInitialize* for consistency with other modules only
- *CntrlCaptureImage* uses CCDPP module to input image and place in buffer
- *CntrlCompressImage* breaks the 64 x 64 buffer into 8 x 8 blocks and performs FDCT on each block using the CODEC module
  - Also performs quantization on each block
- *CntrlSendImage* transmits encoded image serially using UART module

```
void CntrlCaptureImage(void) {
    CcdppCapture();
    for(i=0; i<SZ_ROW; i++)
        for(j=0; j<SZ_COL; j++)
            buffer[i][j] = CcdppPopPixel();
}
```

```
#define SZ_ROW          64
#define SZ_COL          64
#define NUM_ROW_BLOCKS  (SZ_ROW / 8)
#define NUM_COL_BLOCKS  (SZ_COL / 8)
static short buffer[SZ_ROW][SZ_COL], i, j, k, l, temp;
void CntrlInitialize(void) {}
```

```
void CntrlSendImage(void) {
    for(i=0; i<SZ_ROW; i++)
        for(j=0; j<SZ_COL; j++) {
            temp = buffer[i][j];
            UartSend(((char*)&temp)[0]);    /* send upper byte */
            UartSend(((char*)&temp)[1]);    /* send lower byte */
        }
    }
}
```

```
void CntrlCompressImage(void) {
    for(i=0; i<NUM_ROW_BLOCKS; i++)
        for(j=0; j<NUM_COL_BLOCKS; j++) {
            for(k=0; k<8; k++)
                for(l=0; l<8; l++)
                    CodecPushPixel(
                        (char)buffer[i * 8 + k][j * 8 + l]);
            CodecDoFdct();/* part 1 - FDCT */
            for(k=0; k<8; k++)
                for(l=0; l<8; l++) {
                    buffer[i * 8 + k][j * 8 + l] = CodecPopPixel();
                    /* part 2 - quantization */
                    buffer[i*8+k][j*8+l] >>= 6;
                }
        }
}
```

Putting it all together

- *Main* initializes all modules, then uses CNTRL module to capture, compress, and transmit one image
- This system-level model can be used for extensive experimentation
  - Bugs much easier to correct here rather than in later models

```
int main(int argc, char *argv[]) {
    char *uartOutputFileName = argc > 1 ? argv[1] : "uart_out.txt";
    char *imageFileName = argc > 2 ? argv[2] : "image.txt";
    /* initialize the modules */
    UartInitialize(uartOutputFileName);
    CcdInitialize(imageFileName);
    CcdppInitialize();
    CodecInitialize();
    CntrlInitialize();
    /* simulate functionality */
    CntrlCaptureImage();
    CntrlCompressImage();
    CntrlSendImage();
}
```

Design

- Determine system's architecture
  - Processors
    - Any combination of single-purpose (custom or standard) or general-purpose processors
  - Memories, buses
- Map functionality to that architecture
  - Multiple functions on one processor
  - One function on one or more processors
- Implementation
  - A particular architecture and mapping
  - Solution space is set of all implementations
- Starting point
  - Low-end general-purpose processor connected to flash memory
    - All functionality mapped to software running on processor
    - Usually satisfies power, size, and time-to-market constraints
    - If timing constraint not satisfied then later implementations could:
      - use single-purpose processors for time-critical functions
      - rewrite functional specification

Implementation 1: Microcontroller alone

- Low-end processor could be Intel 8051 microcontroller
- Total IC cost including NRE about $5
- Well below 200 mW power
- Time-to-market about 3 months
- However, one image per second not possible
  - 12 MHz, 12 cycles per instruction
    - Executes one million instructions per second
  - *CcdppCapture* has nested loops resulting in 4096 (64 x 64) iterations
    - ~100 assembly instructions each iteration
    - 409,000 (4096 x 100) instructions per image
    - Half of budget for reading image alone
  - Would be over budget after adding compute-intensive DCT and Huffman encoding

Implementation 2: Microcontroller and CCDPP

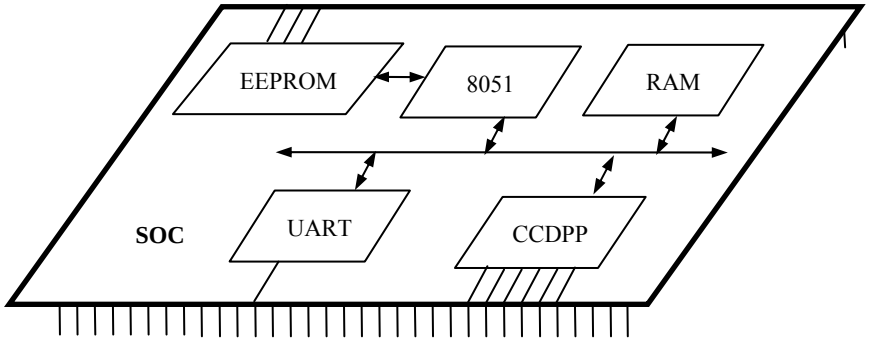

- CCDPP function implemented on custom single-purpose processor
  - Improves performance – less microcontroller cycles
  - Increases NRE cost and time-to-market
  - Easy to implement
    - Simple datapath
    - Few states in controller
- Simple UART easy to implement as single-purpose processor also
- EEPROM for program memory and RAM for data memory added as well

Microcontroller

- Synthesizable version of Intel 8051 available
  - Written in VHDL
  - Captured at register transfer level (RTL)
- Fetches instruction from ROM
- Decodes using Instruction Decoder
- ALU executes arithmetic operations
  - Source and destination registers reside in RAM
- Special data movement instructions used to load and store externally
- Special program generates VHDL description of ROM from output of C compiler/linker

Block diagram of Intel 8051 processor core

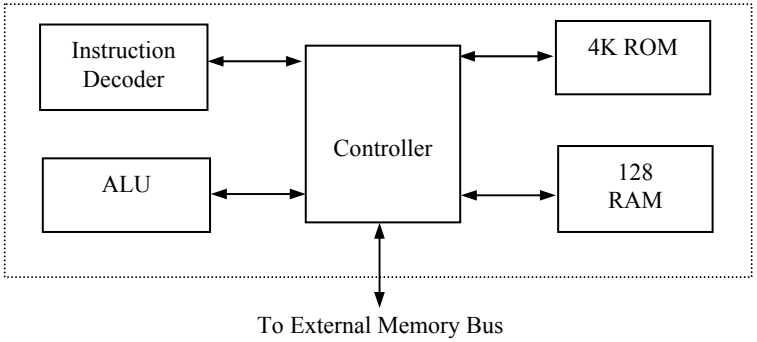

UART

- UART in idle mode until invoked
  - UART invoked when 8051 executes store instruction with UART's enable register as target address
    - Memory-mapped communication between 8051 and all single-purpose processors
    - Lower 8-bits of memory address for RAM
    - Upper 8-bits of memory address for memory-mapped I/O devices
- Start state transmits 0 indicating start of byte transmission then transitions to Data state
- Data state sends 8 bits serially then transitions to Stop state
- Stop state transmits 1 indicating transmission done then transitions back to idle mode

FSMD description of UART

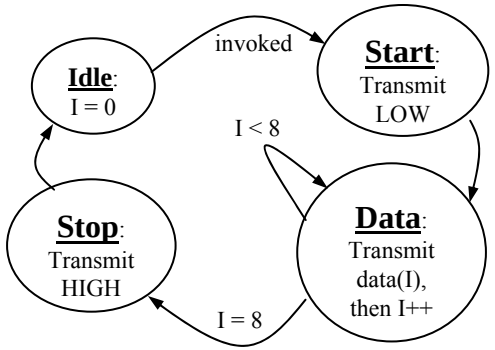

CCDPP

- Hardware implementation of zero-bias operations
- Interacts with external CCD chip
  - CCD chip resides external to our SOC mainly because combining CCD with ordinary logic not feasible
- Internal buffer, *B*, memory-mapped to 8051
- Variables *R*, *C* are buffer's row, column indices
- GetRow state reads in one row from CCD to *B*
  - 66 bytes: 64 pixels + 2 blacked-out pixels
- ComputeBias state computes bias for that row and stores in variable *Bias*
- FixBias state iterates over same row subtracting *Bias* from each element
- NextRow transitions to GetRow for repeat of process on next row or to Idle state when all 64 rows completed

FSMD description of CCDPP

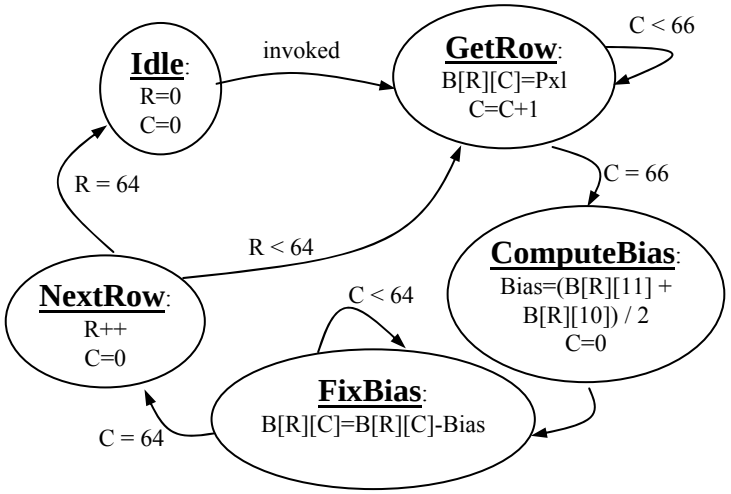

Connecting SOC components

- Memory-mapped
  - All single-purpose processors and RAM are connected to 8051's memory bus
- Read
  - Processor places address on 16-bit address bus
  - Asserts read control signal for 1 cycle
  - Reads data from 8-bit data bus 1 cycle later
  - Device (RAM or SPP) detects asserted read control signal
  - Checks address
  - Places and holds requested data on data bus for 1 cycle
- Write
  - Processor places address and data on address and data bus
  - Asserts write control signal for 1 clock cycle
  - Device (RAM or SPP) detects asserted write control signal
  - Checks address bus
  - Reads and stores data from data bus

Software

- System-level model provides majority of code
  - Module hierarchy, procedure names, and main program unchanged
- Code for UART and CCDPP modules must be redesigned
  - Simply replace with memory assignments
    - *xdata* used to load/store variables over external memory bus
    - *_at_* specifies memory address to store these variables
    - Byte sent to *U_TX_REG* by processor will invoke UART
    - *U_STAT_REG* used by UART to indicate its ready for next byte
      - UART may be much slower than processor
  - Similar modification for CCDPP code
- All other modules untouched

Original code from system-level model

```
#include <stdio.h>
static FILE *outputFileHandle;
void UartInitialize(const char *outputFileName) {
    outputFileHandle = fopen(outputFileName, "w");
}
void UartSend(char d) {
    fprintf(outputFileHandle, "%i\n", (int)d);
}
```

Rewritten UART module

```
static unsigned char xdata U_TX_REG _at_ 65535;
static unsigned char xdata U_STAT_REG _at_ 65534;
void UARTInitialize(void) {}
void UARTSend(unsigned char d) {
    while( U_STAT_REG == 1 ) {
        /* busy wait */
    }
    U_TX_REG = d;
}
```

Analysis

- Entire SOC tested on VHDL simulator
  - Interprets VHDL descriptions and functionally simulates execution of system
    - Recall program code translated to VHDL description of ROM
  - Tests for correct functionality
  - Measures clock cycles to process one image (performance)
- Gate-level description obtained through synthesis
  - Synthesis tool like compiler for SPPs
  - Simulate gate-level models to obtain data for power analysis
    - Number of times gates switch from 1 to 0 or 0 to 1
  - Count number of gates for chip area

Obtaining design metrics of interest

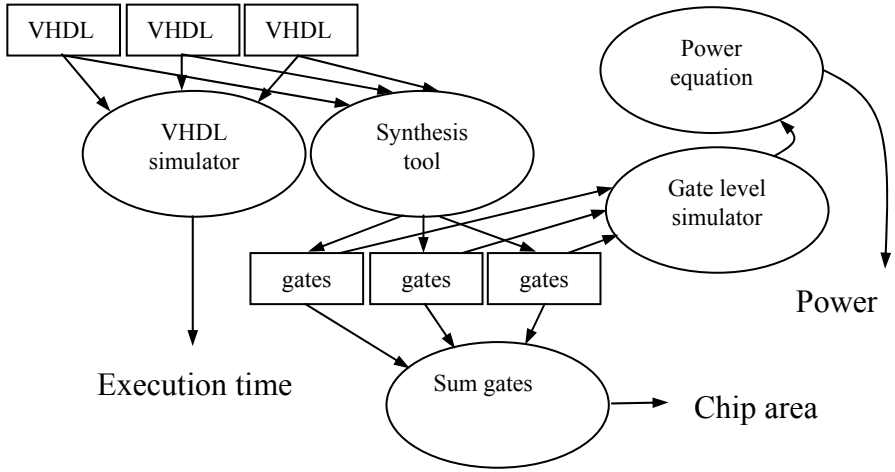

Implementation 2: Microcontroller and CCDPP

- Analysis of implementation 2
  - Total execution time for processing one image:
    - 9.1 seconds
  - Power consumption:
    - 0.033 watt
  - Energy consumption:
    - 0.30 joule (9.1 s x 0.033 watt)
  - Total chip area:
    - 98,000 gates

Implementation 3: Microcontroller and CCDPP/Fixed-Point DCT

- 9.1 seconds still doesn't meet performance constraint of 1 second
- DCT operation prime candidate for improvement
  - Execution of implementation 2 shows microprocessor spends most cycles here
  - Could design custom hardware like we did for CCDPP
    - More complex so more design effort
  - Instead, will speed up DCT functionality by modifying behavior

DCT floating-point cost

- Floating-point cost
  - DCT uses ~260 floating-point operations per pixel transformation
  - 4096 (64 x 64) pixels per image
  - 1 million floating-point operations per image
  - No floating-point support with Intel 8051
    - Compiler must emulate
      - Generates procedures for each floating-point operation
        - mult, add
      - Each procedure uses tens of integer operations
  - Thus, > 10 million integer operations per image
  - Procedures increase code size
- Fixed-point arithmetic can improve on this

Fixed-point arithmetic

- Integer used to represent a real number
  - Constant number of integer's bits represents fractional portion of real number
    - More bits, more accurate the representation
  - Remaining bits represent portion of real number before decimal point
- Translating a real constant to a fixed-point representation
  - Multiply real value by 2 ^ (# of bits used for fractional part)
  - Round to nearest integer
  - E.g., represent 3.14 as 8-bit integer with 4 bits for fraction
    - 2^4 = 16
    - 3.14 x 16 = 50.24 ≈ 50 = 00110010
    - 16 (2^4) possible values for fraction, each represents 0.0625 (1/16)
    - Last 4 bits (0010) = 2
    - 2 x 0.0625 = 0.125
    - 3(0011) + 0.125 = 3.125 ≈ 3.14 (more bits for fraction would increase accuracy)

Fixed-point arithmetic operations

- Addition
  - Simply add integer representations
  - E.g., 3.14 + 2.71 = 5.85
    - 3.14 → 50 = 00110010
    - 2.71 → 43 = 00101011
    - 50 + 43 = 93 = 01011101
    - 5(0101) + 13(1101) x 0.0625 = 5.8125 ≈ 5.85
- Multiply
  - Multiply integer representations
  - Shift result right by # of bits in fractional part
  - E.g., 3.14 * 2.71 = 8.5094
    - 50 * 43 = 2150 = 100001100110
    - >> 4 = 10000110
    - 8(1000) + 6(0110) x 0.0625 = 8.375 ≈ 8.5094
- Range of real values used limited by bit widths of possible resulting values

Fixed-point implementation of CODEC

- COS_TABLE gives 8-bit fixed-point representation of cosine values
- 6 bits used for fractional portion
- Result of multiplications shifted right by 6

```
static const char code COS_TABLE[8][8] = {
    {   64,   62,   59,   53,   45,   35,   24,   12 },
    {   64,   53,   24,  -12,  -45,  -62,  -59,  -35 },
    {   64,   35,  -24,  -62,  -45,   12,   59,   53 },
    {   64,   12,  -59,  -35,   45,   53,  -24,  -62 },
    {   64,  -12,  -59,   35,   45,  -53,  -24,   62 },
    {   64,  -35,  -24,   62,  -45,  -12,   59,  -53 },
    {   64,  -53,   24,   12,  -45,   62,  -59,   35 },
    {   64,  -62,   59,  -53,   45,  -35,   24,  -12 }
};
```

```
static const char ONE_OVER_SQRT_TWO = 5;
static short xdata inBuffer[8][8], outBuffer[8][8], idx;

void CodecInitialize(void) { idx = 0; }
```

```
void CodecPushPixel(short p) {
    if( idx == 64 ) idx = 0;
    inBuffer[idx / 8][idx % 8] = p << 6; idx++;
}
```

```
 void CodecDoFdct(void) {
     unsigned short x, y;
     for(x=0; x<8; x++)
         for(y=0; y<8; y++)
             outBuffer[x][y] = F(x, y, inBuffer);
     idx = 0;
 }
```

```
static unsigned char C(int h) { return h ? 64 : ONE_OVER_SQRT_TWO;}
static int F(int u, int v, short img[8][8]) {
    long s[8], r = 0;
    unsigned char x, j;
    for(x=0; x<8; x++) {
        s[x] = 0;
        for(j=0; j<8; j++)
            s[x] += (img[x][j] * COS_TABLE[j][v] ) >> 6;
    }
    for(x=0; x<8; x++) r += (s[x] * COS_TABLE[x][u]) >> 6;
    return (short)((((r * (((16*C(u)) >> 6) *C(v)) >> 6)) >> 6) >> 6);
}
```

Implementation 3: Microcontroller and CCDPP/Fixed-Point DCT

- Analysis of implementation 3
  - Use same analysis techniques as implementation 2
  - Total execution time for processing one image:
    - 1.5 seconds
  - Power consumption:
    - 0.033 watt (same as 2)
  - Energy consumption:
    - 0.050 joule (1.5 s x 0.033 watt)
    - Battery life 6x longer!!
  - Total chip area:
    - 90,000 gates
    - 8,000 less gates (less memory needed for code)

Implementation 4: Microcontroller and CCDPP/DCT

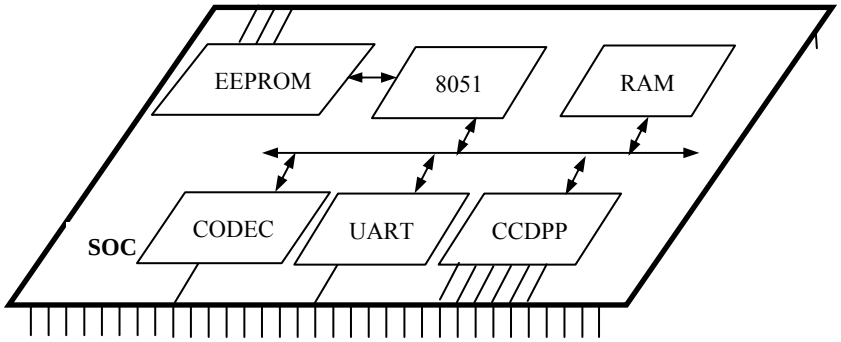

- Performance close but not good enough
- Must resort to implementing CODEC in hardware
  - Single-purpose processor to perform DCT on 8 x 8 block

CODEC design

- 4 memory mapped registers
  - *C_DATAI_REG*/*C_DATAO_REG* used to push/pop 8 x 8 block into and out of CODEC
  - *C_CMND_REG* used to command CODEC
    - Writing 1 to this register invokes CODEC
  - *C_STAT_REG* indicates CODEC done and ready for next block
    - Polled in software
- Direct translation of C code to VHDL for actual hardware implementation
  - Fixed-point version used
- CODEC module in software changed similar to UART/CCDPP in implementation 2

Rewritten CODEC software

```
static unsigned char xdata C_STAT_REG _at_ 65527;
static unsigned char xdata C_CMND_REG _at_ 65528;
static unsigned char xdata C_DATAI_REG _at_ 65529;
static unsigned char xdata C_DATAO_REG _at_ 65530;
void CodecInitialize(void) {}
void CodecPushPixel(short p) { C_DATAO_REG = (char)p; }
short CodecPopPixel(void) {
    return ((C_DATAI_REG << 8) | C_DATAI_REG);
}
void CodecDoFdct(void) {
    C_CMND_REG = 1;
    while( C_STAT_REG == 1 ) { /* busy wait */ }
}
```

Implementation 4: Microcontroller and CCDPP/DCT

- Analysis of implementation 4
  - Total execution time for processing one image:
    - 0.099 seconds (well under 1 sec)
  - Power consumption:
    - 0.040 watt
    - Increase over 2 and 3 because SOC has another processor
  - Energy consumption:
    - 0.00040 joule (0.099 s x 0.040 watt)
    - Battery life 12x longer than previous implementation!!
  - Total chip area:
    - 128,000 gates
    - Significant increase over previous implementations

Summary of implementations

	Implementation 2	Implementation 3	Implementation 4
Performance (second)	9.1	1.5	0.099
Power (watt)	0.033	0.033	0.040
Size (gate)	98,000	90,000	128,000
Energy (joule)	0.30	0.050	0.0040

- Implementation 3
  - Close in performance
  - Cheaper
  - Less time to build
- Implementation 4
  - Great performance and energy consumption
  - More expensive and may miss time-to-market window
    - If DCT designed ourselves then increased NRE cost and time-to-market
    - If existing DCT purchased then increased IC cost
- Which is better?

Summary

- Digital camera example
  - Specifications in English and executable language
  - Design metrics: performance, power and area
- Several implementations
  - Microcontroller: too slow
  - Microcontroller and coprocessor: better, but still too slow
  - Fixed-point arithmetic: almost fast enough
  - Additional coprocessor for compression: fast enough, but expensive and hard to design
  - Tradeoffs between hw/sw – the main lesson of this book!